SRO
MOTORSPORTS GROUP
AMERICA

2026
SUPPLEMENTAL FUEL REGULATIONS

INTRODUCTION

The rules below outline the equipment permitted for refueling from a dedicated fuel rig or approved refueling container. They are governed from FIA Regulations under Appendix J articles, 252, 253, and 257A pertaining to fueling. They have been expanded with illustrations and pictures for clarification.

1.0 Pit Lane Fuel / Fueling

1.1 Fuel Rig General

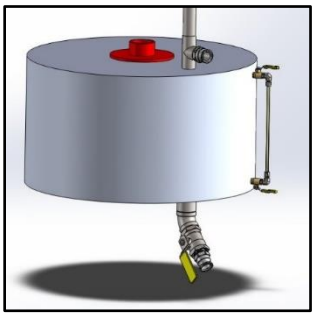

For races where refueling is permitted, a single (One) autonomous supply tank complying to FIA Drawing 252-7 must be used per car. (Ref. FIA Art 257a Section 400)

a) The tank must have a simple cylindrical internal shape without any additional internal parts to improve flow.
b) The top surface of the tank must be no higher than 2m above the track surface.
c) The top of the tank must be vented in accordance with FIA Drawing 252-7 and must incorporate a flame arrester.
d) The bottom surface must have flatness of <3mm inside the tank.
e) Any device or process that modifies the internal pressure or temperature of the tank is prohibited.
f) The "fuel flow" restrictor must be attached directly to the base of the tank per Article 1.2.
g) A Weighing system (load cells) under the base of the tank is permitted providing regulations 1.1 are met.
h) A visible level "sight tube" is permitted but must have isolating valves per Article 1.4.
i) The Fuel Rig components must be assembled without any degree of freedom in relation to the trolley.
j) The base of the fuel rig assembly must have a surface area of at least 2 m^2 and ballasted with a weight greater than that of the tank filled with fuel. Any Castors used must be self-braking.
k) Any pressurized containers (nitrogen bottles) used in the base of the assembly must be secured to prevent damage to the valve or regulators installed.

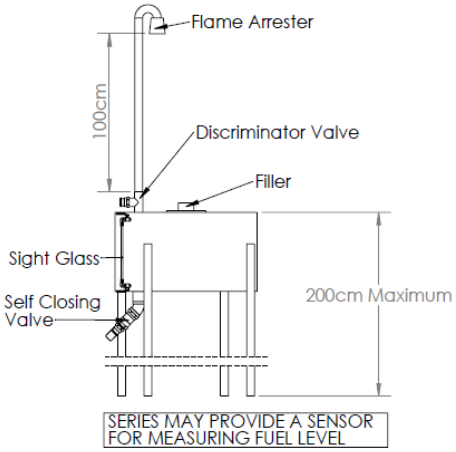

Discriminator Valve

Diagram of Fuel rig components for FIA 252-7

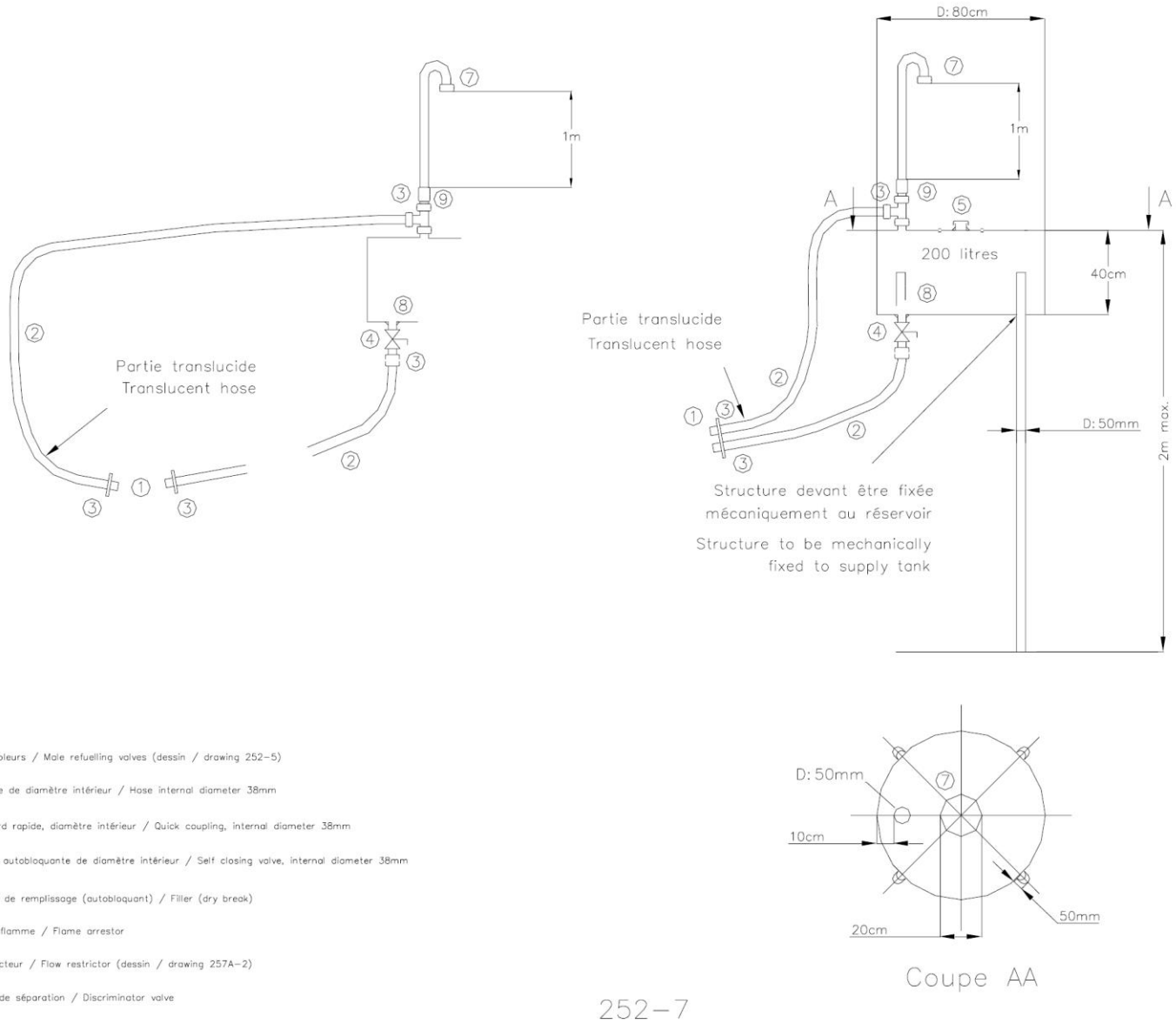

① Accoupleurs / Male refuelling valves (dessin / drawing 252-5)

② Flexible de diamètre intérieur / Hose internal diameter 38mm

③ Raccord rapide, diamètre intérieur / Quick coupling, internal diameter 38mm

④ Vanne autobloquante de diamètre intérieur / Self closing valve, internal diameter 38mm

⑤ Orifice de remplissage (autobloquant) / Filler (dry break)

⑦ Arête flamme / Flame arrestor

⑧ Resitricteur / Flow restrictor (dessin / drawing 257A-2)

⑨ Valve de séparation / Discriminator valve

1.2 Fuel Rig Restrictor

a) Must be attached directly to the base of the tank must use gaskets and sealants resistant to gasoline.
b) Unless permitted in the supplementary regulations, must be constructed from a single piece of material to the dimensions of FIA Drawing 257A-2 (shown in Fig 1.2.1 below).
c) Unless specified the restricted internal Diameter must be a minimum length of 1 mm long. The default diameter is 33mm. The minimum wall thickness at any point on the part must be greater than 2mm.
d) Two-piece restrictors will utilize an insert of a constant diameter specified by the regulations and may be before or after the Deadman valve.

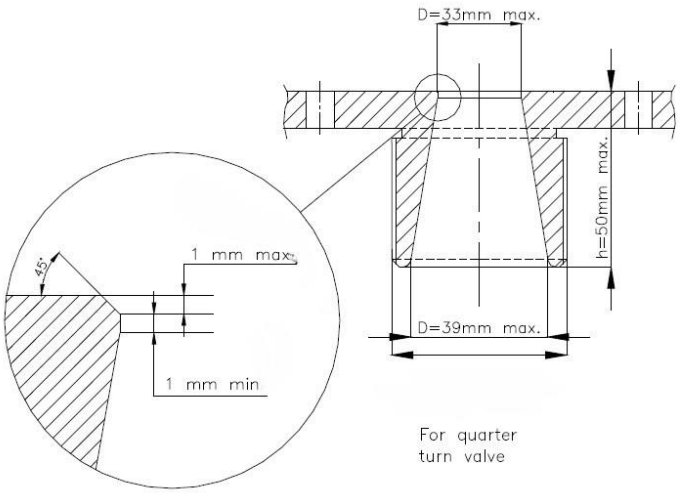

e) BOP size compliant in-line restrictors are permitted, provided they conform to FIA geometry, can be measured and sealed.

RPX 2 Piece Restrictor

RPX Post-Deadman Restrictor

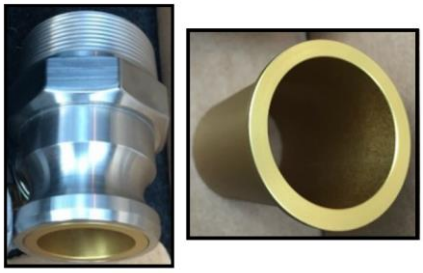

1.3 Self Closing "Deadman" Valve

a) Must be installed after the fuel rig restrictor and always manned during re-fueling.
b) Have a maximum internal diameter of 38 mm / 1.5". Typical examples are shown below.
c) Must be a self-closing 90-degree valve.

Example of Self Closing Valve

1.4 Tank Level Measurement

If used, a visible level equipped with isolating valves fitted as close as possible to the tank must be mounted to the tank. The series may provide a sensor for measuring fuel level.

1.5 Electrical Grounding

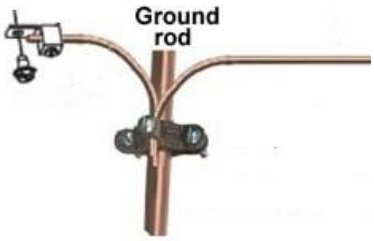

a) All Fuel rigs must be electrically grounded to "earth" via the ground wire running along the base of pit wall.
b) Before and during any refueling operation, the car must also be electrically "earthed" by an independent copper wire that has no other function.
c) The earthed connection can be placed on the car by the fire bottle person, or the mechanic permitted to clean the windows and assist with the driver change.
d) The ground connection on the car must be metallic such as the exhaust pipe or metallic wing strut. Metallic or carbon locations may be tested by officials for conformity.

1.6 Re-fueling Booms, Overhead devices

a) The overhead arm/boom for supporting lines and hoses must not attach to the refueling tank or its tower.
b) Booms may be attached to the trolley or other supporting points and permitted to rotate.
c) Maximum Length is 4m and a minimum height of 2m over its entire length, including the accessories.
d) Must incorporate an identification plate bearing the race number of the competing car.
e) Any lighting equipment installed should not face traffic, must be of a low temperature, flame proof, and located not less than 50cm from any refueling or ventilation lines. NOTE Halogen lights are not permitted.

1.7 Re-fueling Hose Length

a) Minimum length 250 cm. Measured from either end of the flexible hose, does not include any fittings.
b) Use only the approved leak-proof fuel and vent connections shown in Article 1.8.
c) It must be provided with a leak-proof coupling to fit the filler mounted on the car.
d) During re-fueling the outlet of the air vent must be connected to the supply tank with an appropriate coupling of the same diameter.

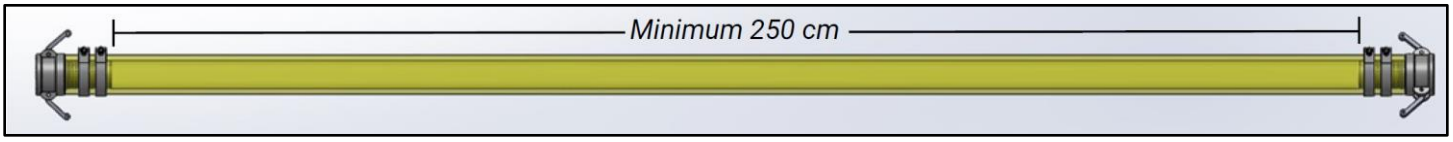

1.8 Fuel Fill & Vent Hardware

Split Coupling

a) The locking connectors permitted should be "cam and groove" style and no larger than 1 ½ inch (38mm).
b) "Cam and Groove" Fittings must unmodified and retain the original wall thickness.
c) Smooth interior faced (not grooved) hose clamps must be used to avoid cutting hose. See figure 1.7.1.
d) Two (2) hose clamps or a "split hose coupling" are preferred for use on all fill lines

Examples of fuel and vent hardware / fittings

Female NPT – Cam/Groove	Male NPT – Cam/Groove	Barbed fitting – Cam/Groove

Not permitted ✗	Ok ✓	Better ✓ ✓	Better ✓ ✓ ✓

1.9 Fuel Fill & Vent Hoses

All hoses and fittings from the supply tank to the car and back must have a maximum inside diameter of 50mm in compliance with FIA Drawing 252-5. Note all autonomous fuel rigs must also have a sealed container and a mating receptacle to the connector to empty the drain line after refueling. Approved fuel connectors are listed in the Appendices.

Fuel Air Separator / Discriminator Valve Examples

Fuel systems based on FIA- 252-5 version B must use the correct fuel air separator for their fuel system. See the Staubli and Krontec below.

Staubli Fuel / Air Separator

Hose ID a,b,c= 38mm (1.5")
d=75mm (3")

Krontec Air/Fuel Separator

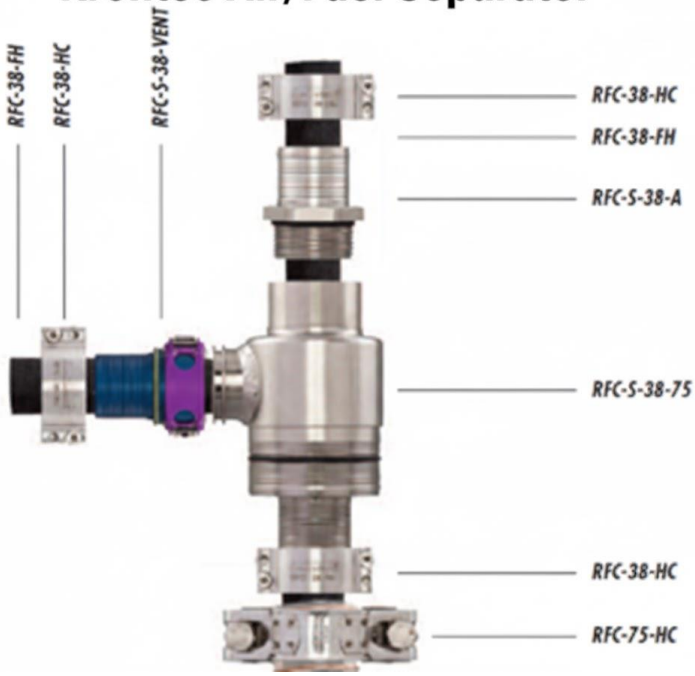

2.0 Crew Requirements

Crew requirements for re-fueling operations are dependent upon the fill nozzle configuration.

2.1 Combined Fuel and Vent Configuration (Krontec & Staubli)

3 crew members are required when using a fuel connection combined with the vent, (e.g. Twin red head, Staubi, Krontec).

a) One person operating the self-closing "deadman" valve on the fuel supply tank.
b) One person operating the fill / Vent nozzle.
c) One person equipped with an approved 10lb or greater ABC fire extinguisher stationed behind the vehicle.

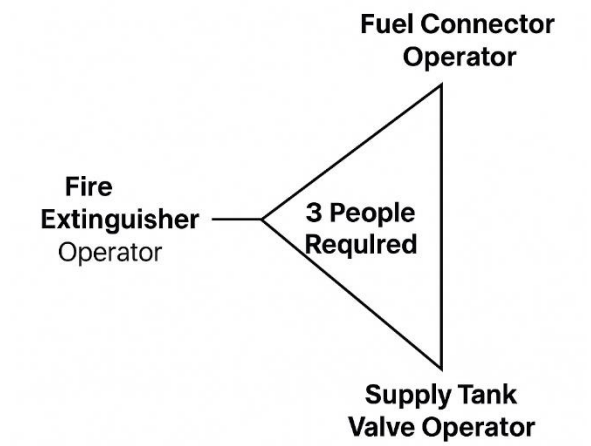

2.2 Separate Fuel and Vent Configuration (Red Head)

4 crew members are required when using any other FIA approved, non-self venting fill system.

a) One person operating the self-closing "deadman" valve on the fuel supply tank.
b) One person operating the fill nozzle.
c) One person operating the vent hose connection on the vehicle.
d) One person equipped with an approved 10lb or greater ABC fire extinguisher located behind the fueler.

3.0 APPENDIX L - REFUELING SAFETY EQUIPMENT

3.1 Helmets

All members of the fuel team are required to wear helmets meeting the specifications below. This includes the deadman, fueler, vent man and fire extinguisher attendant.

a) Full face helmets on FIA Technical list 25 to a standard below and within expiration dates are permitted.
b) Any exposed hair must be completely covered by protective, fire-resistant clothing.
c) All helmets must display the approved unaltered decal as shown below.

or

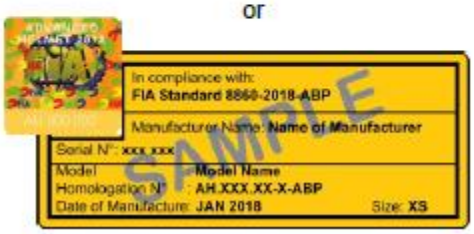

3.1 Fire Resistant Clothing

a) Only fireproof clothing meeting FIA 8856-2000 or FIA 8856-2018 is permitted.
b) All crew members operating the fuel nozzle or vent hose must wear overalls, underwear, gloves, balaclava, socks, shoes, and gloves.
c) Any Clothing must be unmodified and pass scrutineering checks.
d) Any Clothing must display the approved unaltered decal as shown in the example to the right.

or

SA2015
HANS to FIA 8858 HNR
SFI 38.1
SAMPLE
FIA
RS.000.00
Gloves Socks Label
Before 01/01/2016
In compliance wIA FIA
standard 8856-2000
Manuacturer name
Garment + P Attached Label
Before 01/01/2016
FIA
RS.000.00
Manufacturer name
Year of manufacture 2000

4.0 Pump Out Procedure

Competitors may be required to complete a fuel pump-out in Parc Ferme prior to scrutineering. Two crew members are required when pumping out, one to operate the fuel pump and another to operate the fire extinguisher. The fire extinguisher must be a 10lb ABC rated fire extinguisher. A scrutineer must also be present to confirm that the car has been adequately pumped out.

Any car that must complete a fuel pump out prior to scrutineer must use an SRO-approved closed-circuit fuel pump-out system. Fuel must be pumped into a vented 5-gallon jug equipped with visible volume markings. The use of a dump can, or any unvented container is prohibited. A bowser may be used in lieu of a 5-gallon jug; however, the pump-out hose must be equipped with a DeatschWerks 6-02-0225-B (-6AN) dry-break quick-disconnect. Teams may be required to remove the bowser's internal tank to allow verification of the bowser's scale using a certified test weight to confirm accuracy.

Closed Circuit Fuel Pump Out System

The SRO-approved pump-out system shall consist, in upstream-to-downstream order, of a DeatschWerks 6-02-0225-B (-6AN) dry-break quick disconnect, a clear fuel rated braided hose, and a 5-gallon jug lid. The pump out system must be connected to the cars existing pump out hose. No other quick-disconnect fittings are permitted. Competitors may construct their own hose assembly or may purchase an approved assembly for $250.00. The approved hose assembly is shown in the photo below.

DeatschWerks 6-02-0225-B

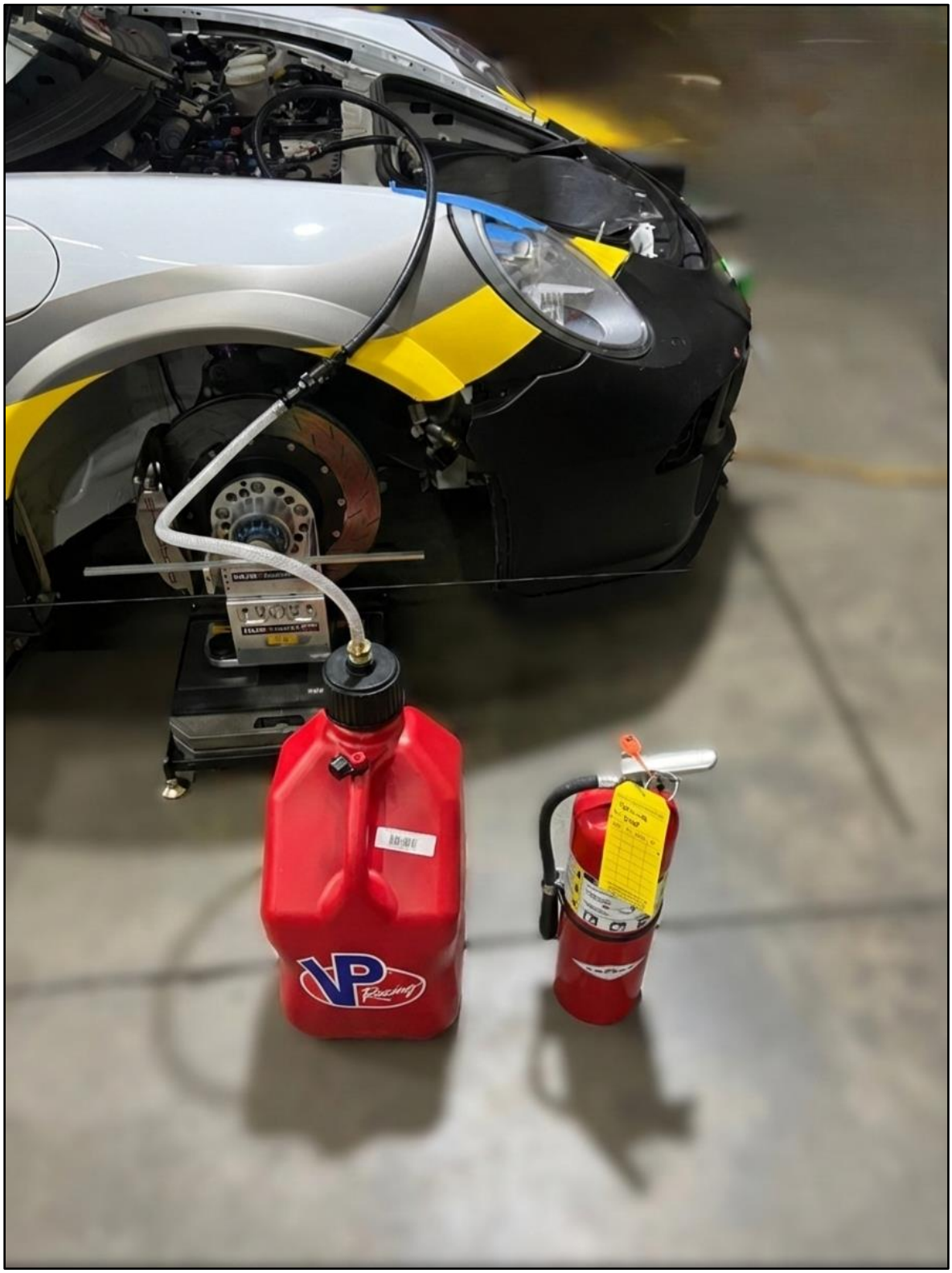
VP Racing

Appendix 1 – FIA 252-5 Version A (Redhead)

PUSH / PULL MALE SERIES

FIA DRAWING 252-5 (VERSION A)

	D1	D2	D3	D4	L1
PP20M	2.0"	2.5"	2.25"	3.7"	6.3"
PP20MR	1.5"	2.5"	1.75"	3.7"	6.3"
PF20MS	1.5"	2.5"		3.7"	6.9"
PP15M	1.5"	2.0"	1.75"	3.3"	5.7"
PF30M	1.25"	1.65"	1.45"	2.68"	4.64"
PF40M	1.25"	1.65"	1.45"	2.68"	4.64"
PP125M	1.25"	1.75"	1.5"	2.9"	5.1"

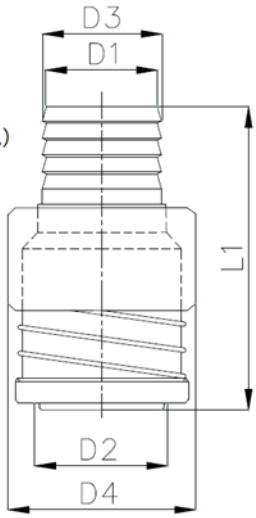

PUSH / PULL FEMALE

FIA DRAWING 252-5 (VERSION A)

	D1	D2	L3	L4
PP20F	2.0"	2.5"	6.75"	3.25"
PP20FR	2.0"	2.5"	6.75"	3.25"
PF31F	1.75"	2.12"	5.3"	3"
PF41F	1.75"	2.12"	5.7"	3.38"
PP15F	1.5"	2.0"	6.75"	3.25"
PP125F	1.25"	1.75"	6.25"	3.1"

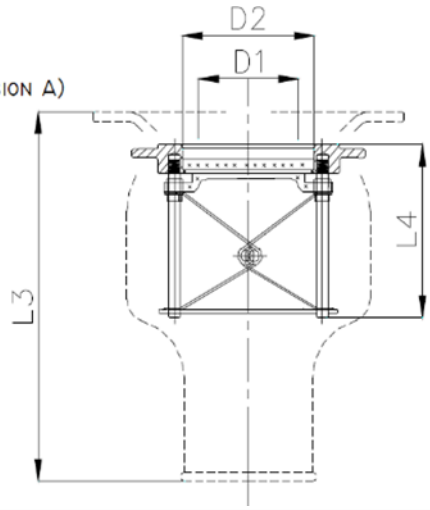

Appendix 2 – FIA 252-5 Version B (Staubli)

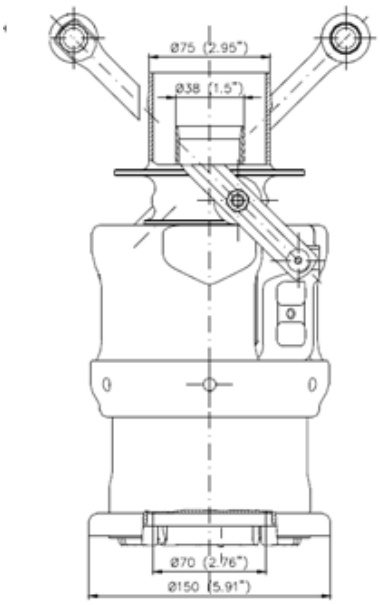

FIA DRAWING 252-5 (VERSION B)
COAXIAL COUPLING - MALE

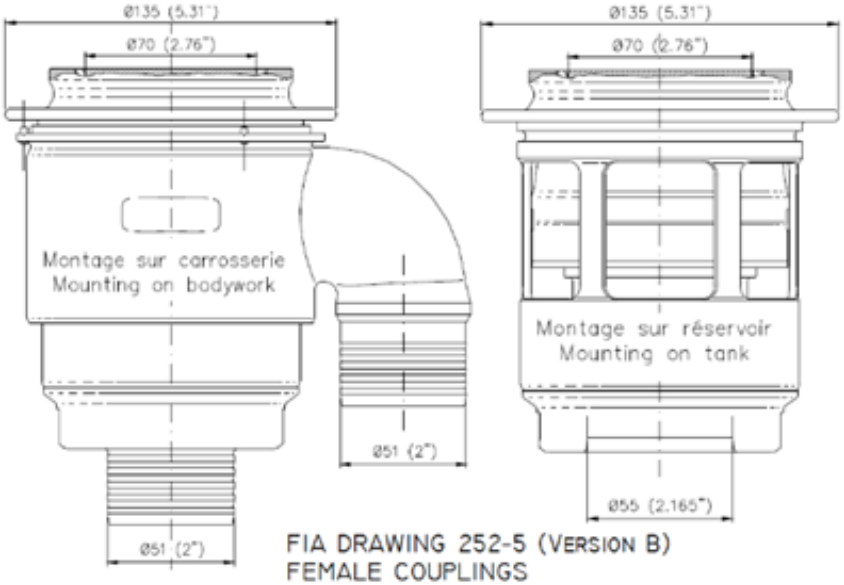

FIA DRAWING 252-5 (VERSION B)
FEMALE COUPLINGS
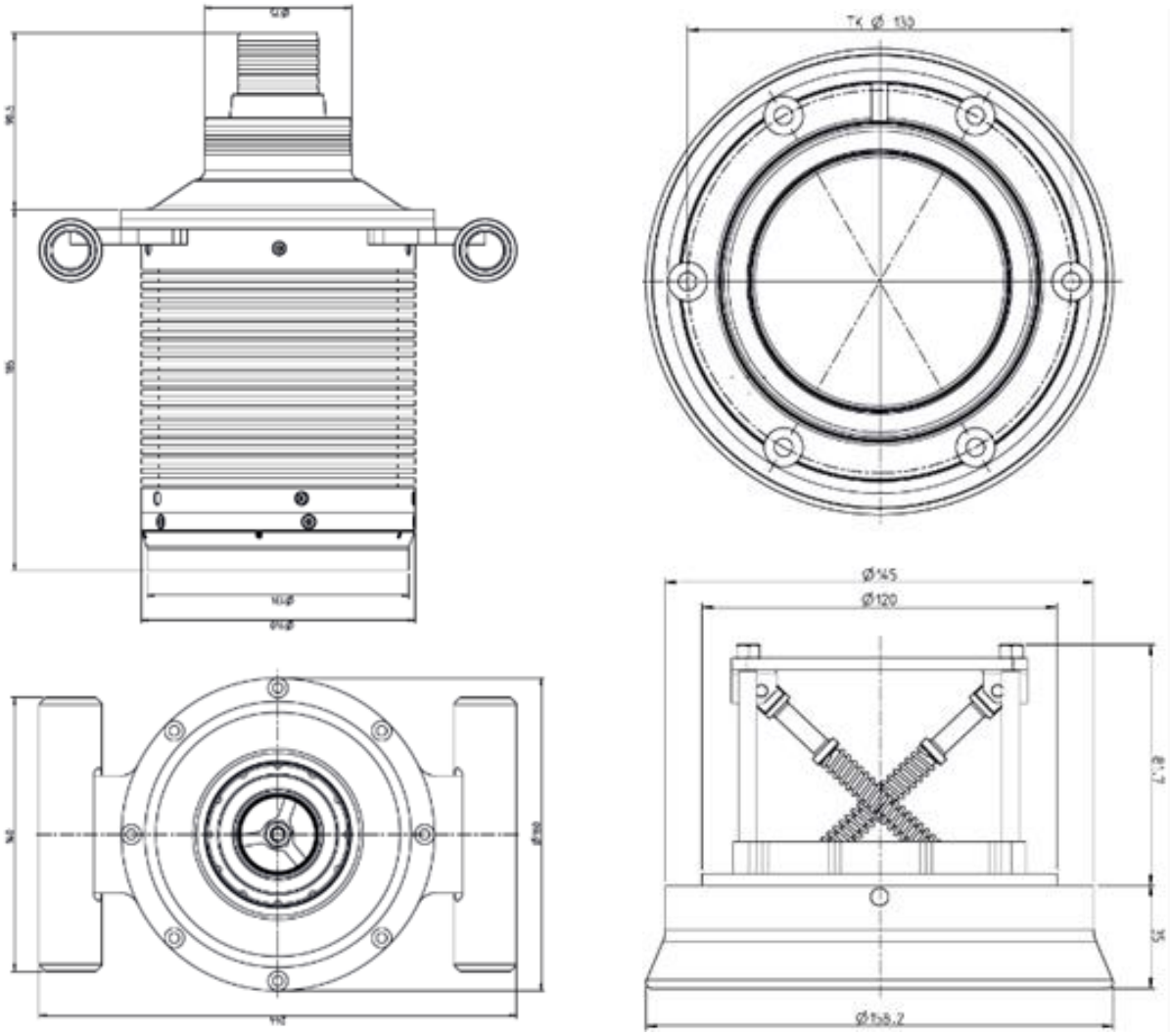
Appendix 3 – FIA 252-5 Version B (Krontec)